GUITAR STAND

LK ELECTRONICS
www.lksound.com



EVA Tube



GS001



GS002



GS003

GS001	GS002	GS003
Height: 420mm Width: 200–335mm Material: Steel Inner box: 340x80x460mm Shipping Package: 510x360x480mm (6pcs)	Height: 420mm Width: 200–335mm Material: Steel Inner box: 340x80x460mm Shipping Package: 510x360x480mm (6pcs)	Height: 420mm Width: 200–335mm Material: Steel Inner box: 340x80x460mm Shipping Package: 510x360x480mm (6pcs)



GS001B



GS002B



GS003B

GS001B	GS002B	GS003B
Height: 380mm Width: 335mm Material: Steel Inner box: 320x70x415mm Shipping Package: 450x340x430mm (6pcs)	Height: 380mm Width: 335mm Material: Steel Inner box: 320x70x415mm Shipping Package: 450x340x430mm (6pcs)	Height: 380mm Width: 335mm Material: Steel Inner box: 320x70x415mm Shipping Package: 450x340x430mm (6pcs)

FOLDERABLE A FRAME GUITAR STAND

Guitar stand w/ collapsible support arms and legs, push–button width adjustment
Versatile stepped support arm accommodates universal, acoustic and electric guitars.
Collapsible arms and legs for smaller volume,save space for transport and storage.



GS001FD

GS001FD

Height: 400mm
Width: 335mm
Weight: 1.55kg
Inner box: 260x80x360mm
Shipping Package:
540x430x380mm (10pcs)



GS002FD

GS002FD

Height: 400mm
Width: 335mm
Weight: 1.5kg
Inner box: 250x80x350mm
Shipping Package:
520x430x370mm (10pcs)



GS003FD



GS003FD

Height: 400mm
Width: 335mm
Weight: 1.5kg
Inner box: 250x80x350mm
Shipping Package:
520x430x370mm (10pcs)











GS026



GS018

GS026

Height: 410mm
Folding Height: 280mm
Width: 335mm
Material: Steel
Inner box: 250x70x360mm
Shipping Package:
450x270x380mm (6pcs)

GS018

Height:440mm
Width adjustable form size:
210–345mm
Material: Steel
Inner box: 340x100x460mm
Shipping Package:
630x360x480mm (6pcs)



GS027

GS027

Height: 410mm
Folding Height: 280mm
Width: 335mm
Material: Steel
Inner box: 260x70x640mm
Shipping Package:
450x280x660mm (6pcs)



GS005



GS006



GS007



GS008

GS005	GS006	GS007	GS008
Height: 600–700mm Tube Size: 22–15mm Material: Steel Inner box: 180x130x530mm Shipping Package: 680x380x550mm (10pcs)	Height: 660–730mm Tube Size: 25–19mm Material: Steel Inner box: 180x130x520mm Shipping Package: 680x380x540mm (10pcs)	Height: 620–720mm Tube Size: 22–15mm Material: Steel Inner box: 180x90x510mm Shipping Package: 480x380x530mm (10pcs)	Height: 620–720mm Tube Size: 22–15mm Material: Steel Inner box: 130x110x510mm Shipping Package: 580x280x530mm (10pcs)



GS009



GS010



GS021



GS009	GS010	GS021
Height: 760–850mm Tube Size: 25–19mm Material: Steel Inner box: 180x130x620mm Shipping Package: 680x380x640mm (10pcs)	Height: 760–850mm Tube Size: 25–19mm Material: Steel Inner box: 180x130x620mm Shipping Package: 680x380x640mm (10pcs)	Height: 750–1060mm Base Materials: Nylon Inner box: 130x100x1010mm Shipping Package: 320x280x1040mm (6pcs)



GS013



GS028

GS013	GS028
Height: 700–830mm Material: Steel Inner box: 300x125x475mm Shipping Package: 620x390x490mm (6pcs)	Height: 820–1030mm Material: Steel Inner box: 515x125x590mm Shipping Package: 650x530x610mm (5pcs)



GS011



GS012



GS029



GS030

GS011	GS012	GS029	GS030
Height: 850–1090mm Material: Steel Inner box: 215x120x725mm Shipping Package: 450x380x740mm (6pcs)	Height: 700–820mm Material: Steel Inner box: 215x170x610mm Shipping Package: 530x450x630mm (6pcs)	Height: 900–1030mm Material: Steel Inner box: 170x160x735mm Shipping Package: 500x360x750mm (6pcs)	Height: 1350–1750mm Material: Steel Inner box: 190x180x820mm Shipping Package: 400x380x840mm (4pcs)



GS040

GS040
Height: 800–1220mm Material: Steel Inner box: 120x100x675mm Shipping Package: 320x260x700mm (6pcs)



GS041

GS041
Height: 800–1220mm Material: Steel Inner box: 110x110x780mm Shipping Package: 350x240x800mm (6pcs)



GS042

GS042
Height: 800–1220mm Material: Steel Inner box: 140x140x780mm Shipping Package: 440x300x800mm (6pcs)



GS039

GS039
Height: 800–1220mm Base Material: Nylon Inner box: 130x95x990mm Shipping Package: 310x280x1020mm (6pcs)



GS043

GS043
Height: 800–1220mm Material: Steel Inner box: 130x100x770mm Shipping Package: 320x280x790mm (6pcs)



GS034

GS034
Height: 800–1220mm Base Material: Nylon Inner box: 120x110x560mm Shipping Package: 350x260x590mm (6pcs)



GS059

GS059
Height: 710–1130mm Width: 680mm Depth: 520–620mm Weight: 2.68kg Inner box: 145x110x725mm Shipping Package: 350x310x745mm (6pcs)



GS048

GS048
Height: 400–540mm Material: Steel Inner box: 145x100x430mm Shipping Package: 320x310x460mm (6pcs)



GS038

GS038
Height: 740–1110mm Material: Steel Weight: 1.5kg Inner box: 100x100x660mm Shipping Package: 320x220x680mm (6pcs)



GS044

GS044
Height: 660–980mm Material: Steel Inner box:480x110x910mm Shipping Package: 690x500x930mm (6pcs)



GS050

GS050
Height: 410mm Material: Steel / Base: Plastic Inner box: 155x100x450mm Shipping Package: 530x330x470mm (10pcs)



GS014
(3pcs,5pcs,7pcs)

GS014(3pcs,5pcs,7pcs)		
Height: 680mm Depth:540 Width: 420/620/820mm Material: Steel		
GS014–3	**GS014–5**	**GS014–7**
Inner box: 150x110x620mm Shipping Package: 350x320x650mm (6pcs)	Inner box: 150x110x620mm Shipping Package: 350x320x650mm (6pcs)	Inner box: 150x110x810mm Shipping Package: 350x320x830mm (6pcs)

PROFESSIONAL **GUITAR** STAND

GS051-3-5-7

GS051–3
Fold size：LxDxH: 575x455x150mm
Open size：LxDxH: 575x455x760mm
Inner box: 465x160x585mm
Shipping Package: 480x340x605mm (2pcs)

GS051–5
Fold size：LxDxH: 895x455x150mm
Open size：LxDxH: 895x455x760mm
Inner box: 465x160x905mm
Shipping Package: 480x340x925mm (2pcs)

GS051–7
Fold size：LxDxH: 1215x455x150mm
Open size：LxDxH: 1215x455x760mm
Inner box: 465x160x1225mm
Shipping Package: 480x340x1245mm (2pcs)





GS053



GS054

GS053

Yoke front side (internal dimension) 425mm
Yoke front side (internal dimension) 395mm
End pin holder to Yoke (upright dimension) 805mm
Tube: 30x30mm
Inner box: 415x110x800mm
Shipping Package: 430x350x820mm (3pcs)

GS054

Yoke front side (internal dimension) 325mm
Yoke front side (internal dimension) 285mm
End pin holder to Yoke (upright dimension) 630mm
Tube: 25x25mm
Inner box: 415x110x695mm
Shipping Package: 430x350x715mm (3pcs)

PORTABLE FLUTE STAND



GS077

GS077

Height: 205mm
Base Diameter: Φ260mm
Material: Steel
Weight: 0.3kg
Inner box: 105x95x280mm
Shipping Package:
505x445x300mm (20pcs)

UKULELE STAND

Portable and fully–collapsible guitar/ ukulele stand
Fold flat with collapsible arms and legs for smaller volume, save space for transport and storage.



GS080





GS080

Height: 235mm
Base Size: 211x205mm
Material: Steel
Weight: 0.9kg
Inner box: 180x80x225mm
Shipping Package:
430x380x245mm (10pcs)

TRIPOD GUITAR STAND

Hanging –style guitar stand
Sturdy steel base construction for longevity.
The stand is legs come with padding that safeguards your guitar is finish

GS078

Height: 720–1085mm
Tube Size: 25–19mm
Base Spread: 565–500mm
Material: Steel
Weight: 1.5kg
Inner box: 190x100x600mm
Shipping Package:
530x400x620mm (10pcs)





GS078



GS103

Height: 385–600mm
Width: 380mm
Weight: 1.72kg
Inner box: 300x105x410mm
Shipping Package:
620x555x430mm (10pcs)







GS079

Height: 480mm
Width: 400mm
Weight: 0.7kg
Inner box: 150x80x505mm
Shipping Package:
430x320x525mm (10pcs)

GS099

Height: 480mm
Width: 400mm
Weight: 0.74kg
Inner box: 150x80x505mm
Shipping Package:
430x320x525mm (10pcs)

FOUR GUITAR STAND

This guitar stand makes for the perfect addition to any stage, studio, or home.
The hanger is adjustable and movable, and folded, allowing you to quickly access up to 4 acoustic, electric or bass guitars .
Even unconventional –shaped guitars can be safely stored.
The large EVA rolls protect the guitars from accidental knocks or bumps.
Due to upper round tube ,you can easily hang the guitar in any direction you desire.
The U–shaped hinges on legs enhance stability and can be taken apart to make easier transport.





GS081

Height: 844–1444mm
Tubing: 35/38mm
Base Diameter: 660x360mm
Suitable for: acoustic guitar,
electric guitar,
bass
Material: Steel
Weight: 6kg
Inner box: 800x290x190mm
Shipping Package:
820x310x400mm (2pcs)



PORTABLE VIOLIN STAND W/STRINGER HANGER

This is a portable and collapsible violin stand ideal for daily practice and travel.
Its double support stand design,with two padded feet that open and close simultaneously, providing increased stability.
It features practical design elements such as a retractable bow shelf capable of accommodating bows and a violin protection button that can be locked to prevent the instrument from toppling over.
Thick foam padded yoke and support arm protect violin from scratches and dents.
Crafted from hard composite materials, this stand offers excellent waterproof,corrosion resistant properties and superb strenght and durability, allowing the main structure to with stand long-term usage without cracking or breaking.
Its folding structure allows it to collapse down to a compact size, making it highly protable and ideal for use by traveling musicians, orchestras and performers.



GS087

Height: 580–695mm(neck–rest to floor)
225–400mm(neck–rest to support arm)
Base Diameter: 264x192mm
Material: Steel
Weight: 1.3kg
Inner box: 190x95x360mm
Shipping Package: 505x400x380mm (10pcs)



CLASSIC TRIPOD VIOLIN STAND

Our violin stand is a classic and stable violin stand for your daily practice.
Thick foam padden yoke and support arm protect violin from scratches and dents.
Adjustable height neck rest ideal for violin of sizes.



GS096

Height: 395–623mm
(neck–rest to support arm)
Base Diameter: 319x287mm
Weight: 1kg
Inner box: 120x90x480mm
Shipping Package:
480x260x500mm (10pcs)

TABLE VIOLIN STAND



TABLE VIOLIN / UKULELE STAND



GS097

Height: 170mm
Width: 34–176mm
Depth: 165mm
Weight: 0.3kg
Inner box: 175x45x180mm
Shipping Package: 370x255x395mm (20pcs)

GS098

Height: 220mm
Width: 34–176mm
Depth: 203mm
Weight: 0.4kg
Inner box: 240x45x215mm
Shipping Package: 500x255x465mm (20pcs)

OTTO CURVED SOPRANO/ ALTO SAXOPHONE STAND



GS088

TEANA TENOR/ ALTO SAXOPHONE STAND



GS089

GS088

Height: 400mm
Base Diameter: 520mm
Weight: 0.75kg
Inner box: 150x100x380mm
Shipping Package:
530x320x400mm (10pcs)

GS089

Height: 440mm
Base Diameter: 520mm
Weight: 0.8kg
Inner box: 150x100x430mm
Shipping Package:
530x320x450mm (10pcs)

TWINS P 2 TENOR /ALTO SAXOPHONE/ FLUTES STAND





GS091

Height: 440mm
Base Dimension: 560x400mm
Weight: 2kg
Inner box: 220x115x570mm
Shipping Package:
605x460x590mm (10pcs)

TEANA P TENOR/ ALTO SAXOPHONE STAND w/ FLUTE PEG



GS090

GS090	GS093
Height: 440mm	Height: 800–1220mm
Base Diameter: 520mm	Base Diameter: 650mm
Weight: 1kg	Weight: 1.5kg
Inner box: 150x100x430mm	Inner box: 150x130x630mm
Shipping Package: 530x320x450mm (10pcs)	Shipping Package: 680x320x650mm (10pcs)

TEANA T HIGH-POSITION TENOR/ ALTO SAXOPHONE STAND



GS093

CHINESE PIPA/ ELECTRIC GUITAR STAND

These are compact and Liuqin / stable Pipa / Electric guitar stand
The padded head can fit Pipa, Ruan perfectly, Liuqin.
Support base is designed according to the Chinese traditional instrument shape,with non–slip soft foam to hold instrument safely and prevent it from damage and scratches.

GS082

Height: 660–840mm(neck–rest to floor)
558–710mm(neck–rest to support arm)
Base Diameter: 365x283mm
Support arm inner depth: 90mm
Material: Steel
Weight: 1.8kg
Inner box: 300x125x580mm
Shipping Package: 655x620x600mm (10pcs)







CHINESE ZHONG RUAN(MEDIUM RUAN)/ ACOUSTIC GUITAR STAND

These are compact and stable Zhong Ruan/ Acoustic guitar stand.
The padded head can fit Pipa, Ruan perfectly, Liuqin.
Support base is designed according to the Chinese traditional instrument shape,with non–slip soft foam to hold instrument safely and prevent it from damage and scratches.

GS083

Height: 660–840mm(neck–rest to floor)
525–705mm(neck–rest to support arm)
Base Diameter: 365x283mm
Support arm inner depth: 60mm
Material: Steel
Weight: 1.8kg
Inner box: 340x125x580mm
Shipping Package: 700x655x600mm (10pcs)







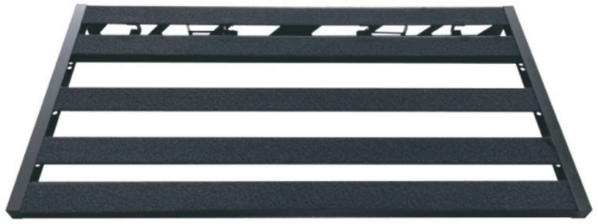

GS052L

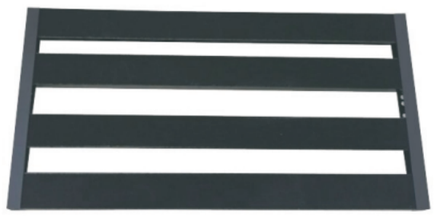

GS052M

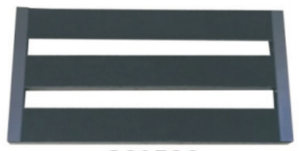

GS052S





GS052L	GS052M	GS052S
Material: Al uminum(6063–T5)	Material: Al uminum(6063–T5)	Material: Al uminum(6063–T5)
LxWxH: 812x430x102mm	LxWxH: 596x305x95mm	LxWxH: 406x203x80mm
Inner box: 510x165x850mm	Inner box: 370x155x640mm	Inner box: 370x140x450mm
Shipping Package:	Shipping Package:	Shipping Package:
530x515x870mm (3pcs)	645x390x660mm (4pcs)	760x440x470mm (6pcs)

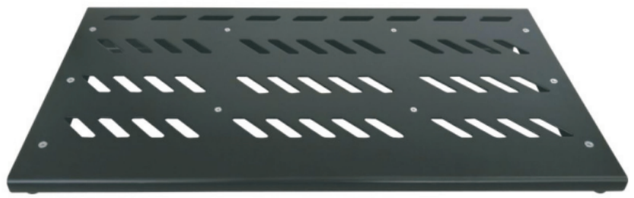

GS057L

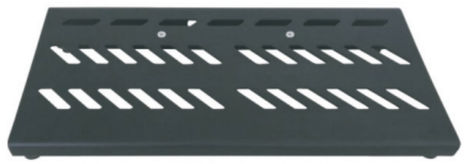

GS057M



GS057S





GS057L	GS057M	GS057S
Material: Al uminum	Material: Al uminum	Material: Al uminum
LxWxH: 815x430x105mm	LxWxH: 600x295x85mm	LxWxH: 400x205x75mm
Inner box: 510x205x860mm	Inner box: 370x195x650mm	Inner box: 370x180x460mm
Shipping Package:	Shipping Package:	Shipping Package:
635x530x880mm (3pcs)	805x390x670mm (4pcs)	760x560x480mm (6pcs)



New

GS105

Pedal Material: Al uminum(6063–T5)
Pedal(LxWxH): 812x430x102mm
Inner box: 510x165x850mm
Shipping Package:
530x515x870mm (3pcs)











GS015



GS061



GS016

GS015	GS061	GS016
Material: Steel Inner box: 95x35x155mm Shipping Package: 500x200x340mm (50pcs)	Material: Steel Inner box: 90x50x130mm Shipping Package: 480x280x300mm (50pcs)	Material: Steel Inner box: 95x35x155mm Shipping Package: 500x200x340mm (50pcs)



GS017



GS019



GS036

GS017	GS019	GS036
Material: Steel Inner box: 125x25x300mm Shipping Package: 280x270x320mm (20pcs)	Material: Steel Inner box: 110x95x150mm Shipping Package: 590x330x510mm (50pcs)	Material: Steel Inner box: 65x65x190mm Shipping Package: 355x355x410mm (50pcs)



GS055





GS056



GS106

GS055	GS056	GS106
Height: 130mm Base size: Φ116mm Inner box: 155x35x140mm Shipping Package: 485x390x160mm (30pcs)	Material: Steel Height：120mm Middle size: Φ16.5mm Base size: Φ52mm Inner box: 155x35x140mm Shipping Package: 360x330x200mm (10pcs)	Material: Steel LxWxH: 125x70x26mm Inner box: 80x35x140mm Shipping Package: 430x205x310mm (50pcs)



GS037



GS104



GS037	GS104
Material: Steel LxWxH: 90x100x92mm Cup mouth diameter : ϕ 88mm Cup opening: 44mm Weight: 0.25kg Inner box: 135x100x100mm Shipping Package: 705x530x240mm (50pcs)	Material: Steel LxWxH: 240x100x92mm Cup mouth diameter : ϕ 88mm Cup opening: 44mm Weight: 0.54kg Inner box: 110x105x250mm Shipping Package: 555x350x 530mm (30pcs)

GS100

GS100
Width: 315mm Depth: 64mm Height: 35mm Material:Steel Inner box: 70x60x330mm Shipping Package: 330x300x350mm (20pcs)











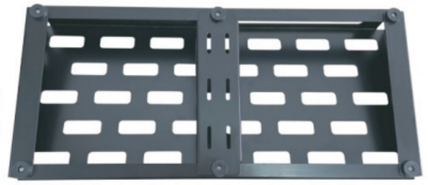

GS108

GS108
Material: Al uminum(6063–T5) LxWxH: 520x240x80mm Weight: 1.18kg Inner box: 560x130x300mm Shipping Package: 580x545x320mm (4pcs)



GS109



GS109

Material: Steel
LxWxH: 480x350x360mm
Weight: 1.3kg
Inner box: 180x105x310mm
Shipping Package:
555x380x330mm (10pcs)



GS110

GS110

Material: Steel
LxWxH: 480x350x360mm
Weight: 1.02kg
Inner box: 190x100x265mm
Shipping Package:
530x400x285mm (10pcs)



GS111

GS111

Material: Steel
LxWxH: 350x280x210mm
Weight: 0.74kg
Inner box: 150x60x220mm
Shipping Package:
330x320x470mm (20pcs)

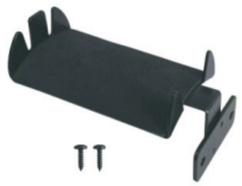

GS113

Material: Steel
LxWxH: 130x60x55mm
Weight: 0.16kg
Inner box: 70x60x140mm
Shipping Package:
380x330x310mm (50pcs)



GS114

Material: Steel
LxWxH: 145x60x100mm
Weight: 0.20kg
Inner box: 110x70x155mm
Shipping Package:
580x380x345mm (50pcs)



GS115

GS115

Material: Steel
LxWxH: 360x185x22mm
Weight: 0.74kg
Inner box: 220x25x370mm
Shipping Package:
460x290x390mm (20pcs)

New





GS117

GS117

Material: Steel
Width: 485mm
Height: 128mm
Depth: 198mm
Weight: 2.3kg
Inner box: 210x65x540mm
Shipping Package:
360x230x560mm (6pcs)



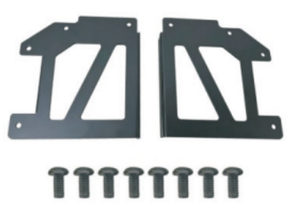

GS117-2



GS117-2

Width: 485mm
Height: 260mm
Depth: 198mm
Material: Steel
Weight: 5.3kg
Inner box: 210x125x540mm
Shipping Package:
525x230x560mm (4pcs)

PROFESSIONAL **GUITAR** STAND



GS031

Shipping Package:
470x290x265mm (20pcs)





GS032



GS033

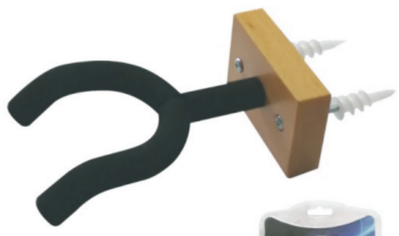

GS047



GS032	GS033	GS047
Material: Steel Shipping Package: 470x290x265mm (20pcs)	Material: Steel Shipping Package: 470x290x265mm (20pcs)	Shipping Package: 410x290x265mm (20pcs)



GS107



GS107

Shipping Package:
470x290x265mm (20pcs)

LAP-TOP STAND

LK ELECTRONICS

www.lksound.com





LT001



LT002



LT003

LT001	LT002	LT003
Height: 235–355mm Width: 235mm Material: Steel Inner box: 290x220x60mm Shipping Package: 320x310x240mm (5pcs)	Height: 235–355mm Width: 235–285mm Material: Steel Inner box: 290x220x60mm Shipping Package: 320x310x240mm (5pcs)	Height: 235–355mm Width: 235–285mm Material: Steel Inner box: 290x220x60mm Shipping Package: 320x310x240mm (5pcs)

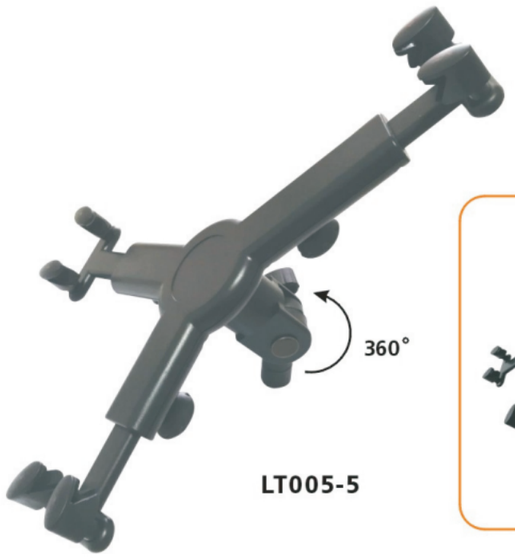

LT005-5





LT005-6



LT005-7



LT005-8

LT005-5-6-7-8

It can be placed applied in 6 t0 10 inches tablet PC, Suitable for: Φ14–20tube

LT005–5	LT005–6	LT005–7	LT005–8
Inner box: 170x95x210mm Shipping Package: 505x360x235mm (10pcs)	Inner box: 170x95x210mm Shipping Package: 505x360x235mm (10pcs)	Inner box: 180x100x220mm Shipping Package: 530x380x245mm (10pcs)	Inner box: 200x95x220mm Shipping Package: 505x420x245mm (10pcs)



LT007

LT007

Height: 350mm
Width: 350mm
Depth: 310mm
Weight: 1.9kg
Inner box: 350x40x370mm
Shipping Package:
435x365x390mm (10pcs)

LT011

Width: 186mm
Depth: 228mm
Weight: 0.3kg
Inner box: 60x40x255mm
Shipping Package:
265x230x275mm (20pcs)



LT011

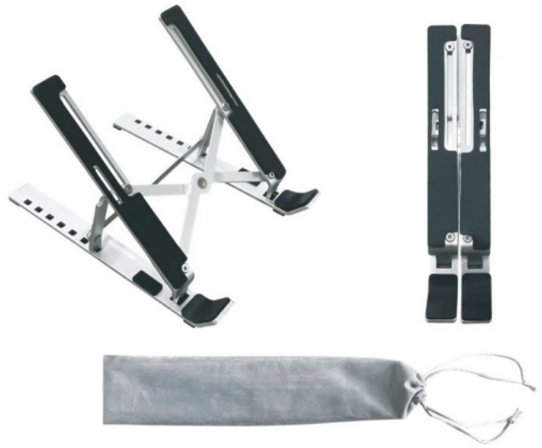



LT012



LT012

Top plate: 80x105mm
Base plate: 90x150mm
Weight: 0.281kg
Inner box: 100x30x160mm
Shipping Package:
425x180x180mm (20pcs)



LT001



LT002



LT003

LT001	LT002	LT003
Height: 235–355mm Width: 235mm Material: Steel Inner box: 290x220x60mm Shipping Package: 320x310x240mm (5pcs)	Height: 235–355mm Width: 235–285mm Material: Steel Inner box: 290x220x60mm Shipping Package: 320x310x240mm (5pcs)	Height: 235–355mm Width: 235–285mm Material: Steel Inner box: 290x220x60mm Shipping Package: 320x310x240mm (5pcs)

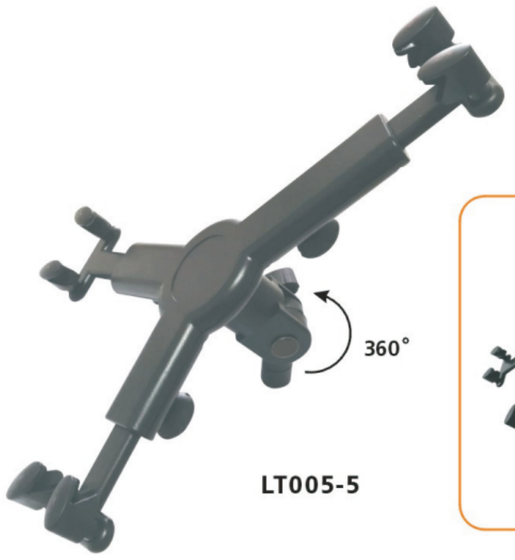

LT005-5





LT005-6



LT005-7



LT005-8

LT005-5-6-7-8

It can be placed applied in 6 t0 10 inches tablet PC, Suitable for: Φ14–20tube

LT005–5	LT005–6	LT005–7	LT005–8
Inner box: 170x95x210mm Shipping Package: 505x360x235mm (10pcs)	Inner box: 170x95x210mm Shipping Package: 505x360x235mm (10pcs)	Inner box: 180x100x220mm Shipping Package: 530x380x245mm (10pcs)	Inner box: 200x95x220mm Shipping Package: 505x420x245mm (10pcs)



LT007

LT007

Height: 350mm
Width: 350mm
Depth: 310mm
Weight: 1.9kg
Inner box: 350x40x370mm
Shipping Package:
435x365x390mm (10pcs)

LT011

Width: 186mm
Depth: 228mm
Weight: 0.3kg
Inner box: 60x40x255mm
Shipping Package:
265x230x275mm (20pcs)



LT011





LT012



LT012

Top plate: 80x105mm
Base plate: 90x150mm
Weight: 0.281kg
Inner box: 100x30x160mm
Shipping Package:
425x180x180mm (20pcs)

PROFESSIONAL **LAP-TOP** STAND

PROFESSIONAL **LAP-TOP** STAND







LT013

Height: 155mm
Width: 210mm
Depth: 270mm
Weight: 0.60kg
Inner box: 180x65x300mm
Shipping Package:
380x355x320mm (10pcs)









New

LT014

Height: 990–1353mm
Book Plate Size: 480x330mm
Material: Steel
Weight: 4.6kg
Inner box: 340x145x765mm
Shipping Package:
605x360x585mm (4pcs)







LT013-H

Height: 186mm
Width: 210mm
Depth: 280mm
Weight: 0.77kg
Inner box: 200x65x300mm
Shipping Package:
420x355x320mm (10pcs)



LT008

LT008

Weight: 1.72kg
Inner box: 260x165x490mm
Shipping Package:
540x515x510mm (6pcs)









LT009

LT009

Clamping range:Tube ϕ 10 –41mm
Width: 64–92mm
Weight: 0.286kg
Inner box: 110x45x260mm
Shipping Package:
580x305x280mm (30pcs)



LT015







LT015

Clamping range:Tube ϕ 10 –41mm
Width: 140–230mm
Weight: 0.37kg
Inner box: 180x65x200mm
Shipping Package:
560x355x430mm (30pcs)





LT025

Clamping range:
Tube ϕ 10 –41mm
Width: 64–92mm
Weight: 0.28kg
Inner box: 110x55x165mm
Shipping Package:
350x305x360mm (30pcs)





LT026

Clamping range:
Tube ϕ 10 –41mm
Width: 140–230mm
Weight: 0.38kg
Inner box: 150x65x180mm
Shipping Package:
470x355x390mm (30pcs)



LT017



LT017

Width: 140–230mm
Weight: 1.04kg
Inner box: 140x80x180mm
Shipping Package:
430x300x390mm (20pcs)



LT018



LT018

Width: 64–92mm
Weight: 0.96kg
Inner box: 140x65x165mm
Shipping Package:
355x300x360mm (20pcs)



LT029-200

LT029-200

Width: 140–230mm
Weight: 0.84kg
Inner box: 120x80x235mm
Shipping Package:
430x260x500mm (20pcs)



LT030-200

LT030-200

Width: 64–92mm
Weight: 0.76kg
Inner box: 120x65x235mm
Shipping Package:
355x260x500mm (20pcs)





LT032

Clamping range:
Tube ϕ 10 –41mm
Width: 64–92mm
Weight: 0.196kg
Inner box: 105x50x230mm
Shipping Package:
335x280x490mm (30pcs)





LT033

Clamping range:
Tube ϕ 10 –41mm
Weight: 0.285kg
Inner box: 110x65x160mm
Shipping Package:
355x350x350mm (30pcs)

PROFESSIONAL **LAP-TOP** STAND



LT019



LT019

Clamping range: Plate 0–53 mm,
Tube ϕ 6–48 mm
Thread adapter: intern 3/8",
extern 5/8"
Width: 140–230mm
Weight: 0.60kg
Inner box: 190x65x200mm
Shipping Package:
590x355x430mm (30pcs)



LT020



LT020

Clamping range: Plate 0–53 mm,
Tube ϕ 6–48 mm
Thread adapter: intern 3/8",
extern 5/8"
Width: 64–92mm
Weight: 0.52kg
Inner box: 160x45x220mm
Shipping Package:
500x255x470mm (30pcs)



LT027



LT027

Clamping range: Plate 0–53 mm,
Tube ϕ 6–48 mm
Thread adapter: intern 3/8",
extern 5/8"
Weight: 0.59kg
Inner box: 180x75x220mm
Shipping Package:
560x405x470mm (30pcs)



LT028



LT028

Clamping range:Tube ϕ 10 –41mm
Width: 140–230mm
Weight: 0.38kg
Inner box: 170x70x210mm
Shipping Package:
530x380x450mm (30pcs)

RACK STAND

LK ELECTRONICS

www.lksound.com

